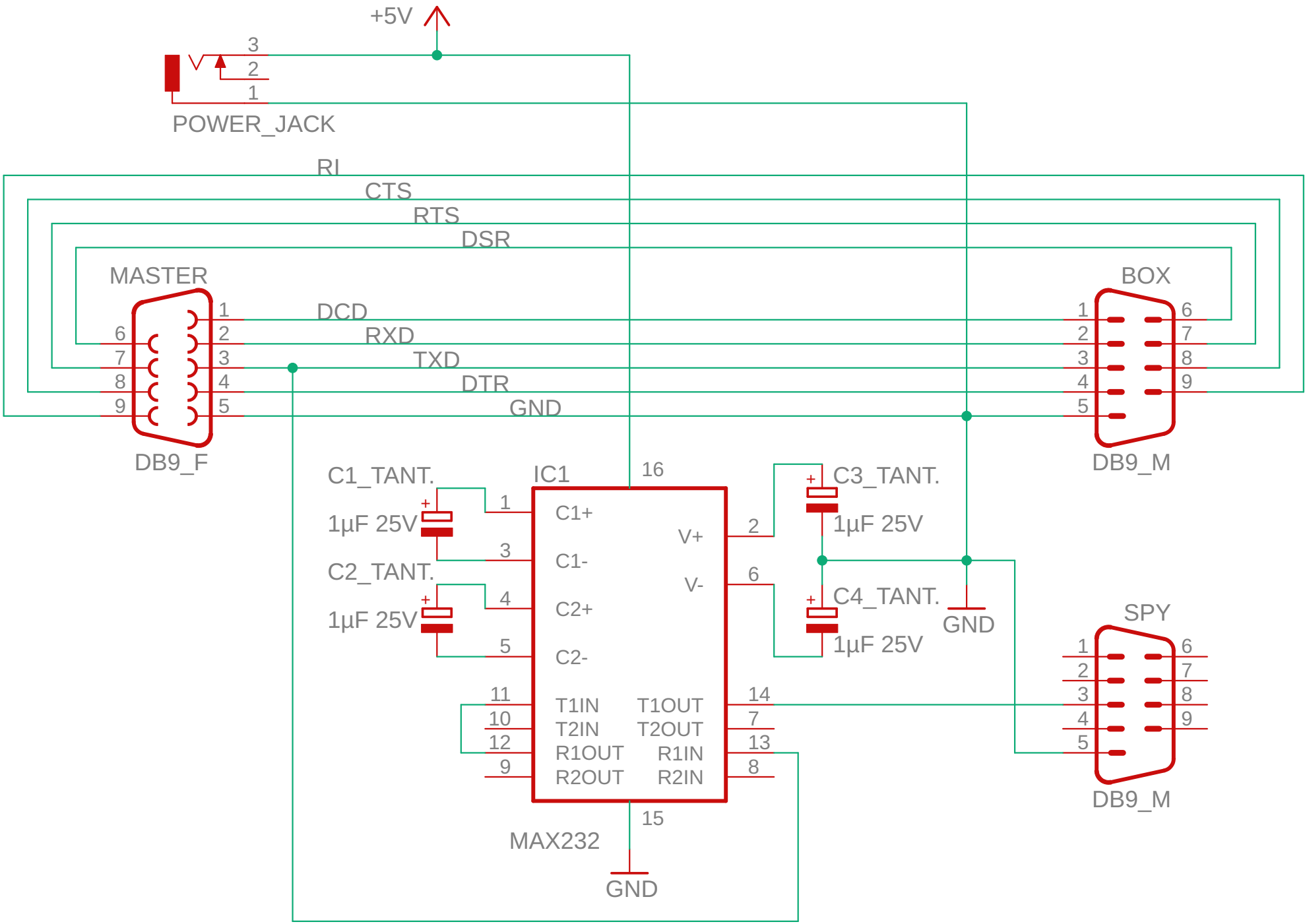
+5V
3
2
1
POWER_JACK
RI
CTS
RTS
DSR
MASTER
DCD
RXD
TXD
DTR
GND
DB9_F
BOX
DB9_M
C1_TANT.
1µF 25V
C2_TANT.
1µF 25V
IC1
16
C1+
C1-
C2+
C2-
V+
V-
T1IN
T2IN
R1OUT
R2OUT
T1OUT
T2OUT
R1IN
R2IN
15
MAX232
GND
C3_TANT.
1µF 25V
C4_TANT.
1µF 25V
GND
SPY
DB9_M